Building Guide

Colorado Chapter of the International Code Council

Single Family Residential Uncovered Decks and Porches

How to Use this Guide

Provide two sets of plans, drawn to scale and complete the following (*hint: use graph paper with ¼" squares. Example: ¼" = 1'*):

1. Complete this Building Guide by filling in the blanks on page two, and indicating which construction details will be used.

2. Provide 2 Plot Plans (**site plan**) showing dimensions of your project or addition and its relationship to existing buildings or structures on the property and the distance to existing property lines drawn to scale.

3. Fill out a building permit application.

The majority of permit applications are processed with little delay. The submitted documents will help determine if the project is in compliance with building safety codes, zoning ordinances and other applicable laws.

The Colorado Chapter of the International Code Council is a professional organization seeking to promote the public health, safety and welfare to building construction. We appreciate your feedback and suggestions. To obtain a master copy of this building guide, please write to the Colorado Chapter of the International Code Council, P.O. Box 961, Arvada, CO 80001.
http://www.coloradochaptericc.org

This handout was developed by the Colorado Chapter of the International Code Council as a basic plan submittal under the 2009 International Residential Code. It is not intended to cover all circumstances. Check with your Department of Building Safety for additional requirements.

Arapahoe County Building Division
6924 S Lima St
Centennial CO 80112
(720) 874-6600 office
(303) 794-3201 fax

Single Family Residential Uncovered Decks and Porches

Directions

1. Fill in the blanks. Please print legibly.
2. Indicate in the check box which detail from page 3 will be used.

Address:

_____

Size and Amount of Lags

_____
(example: Two 1/2"x 4 1/2" lags @ 16" O.C.)

Type of decking _____x_____ - _____
(example: 1 x 4 or 2 x 6 - Trex)

Deck Section

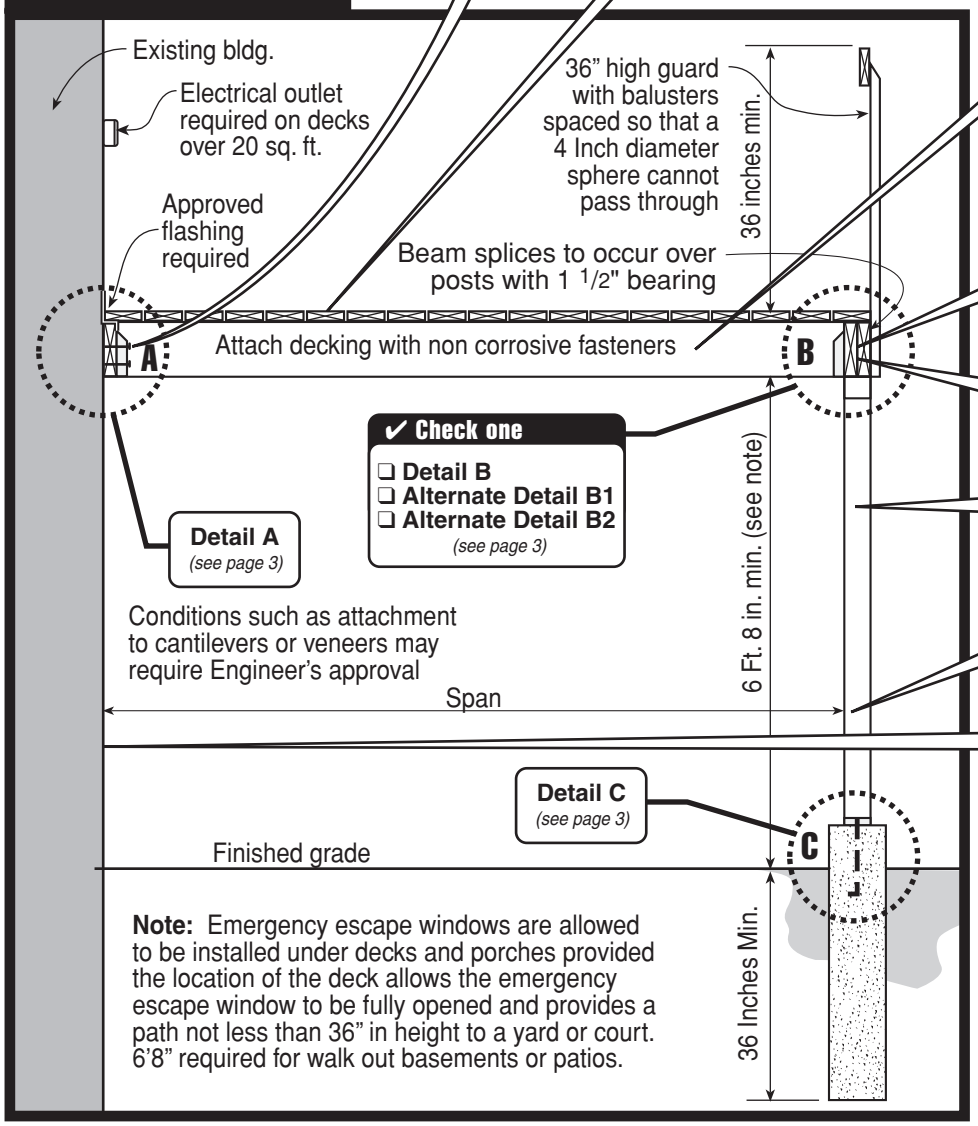

✔ Check one

- ❑ **Detail B**
- ❑ **Alternate Detail B1**
- ❑ **Alternate Detail B2**

(see page 3)

Detail A *(see page 3)*

Detail C *(see page 3)*

2x_____ joists spaced _____" apart
(example: 2 x 10" spaced 24" apart)

(__)_____x_____beam
(example: (2) 2 x 10 - see detail B)

2x_____ rim joist
(example: 2 x 10 - see Alternate B1 & B2)

_____x_____ posts spaced _____ apart
(example: 4 x 4 posts spaced 8' apart)

Span _____
(example: 13' - 4")

Type of siding *(existing)*
_____

Note: Emergency escape windows are allowed to be installed under decks and porches provided the location of the deck allows the emergency escape window to be fully opened and provides a path not less than 36" in height to a yard or court. 6'8" required for walk out basements or patios.

Note: A plot plan (plan view) showing the dimensions of your project or additions and its relationships to existing buildings or structures on the property must be included. In addition to project dimensions, your plot plan must also show other details such as post locations and spacing, joist and beam spans, and any other pertinent information not shown on the section drawing.

This handout was developed by the Colorado Chapter of the International Code Council as a basic plan submittal under the 2009 International Residential Code. It is not intended to cover all circumstances. Check with your Department of Building Safety for additional requirements.

Arapahoe County Building Division
6924 S Lima St
Centennial CO 80112
(720) 874-6600 office
(303) 794-3201 fax

Single Family Residential Uncovered Decks and Porches

Detail A

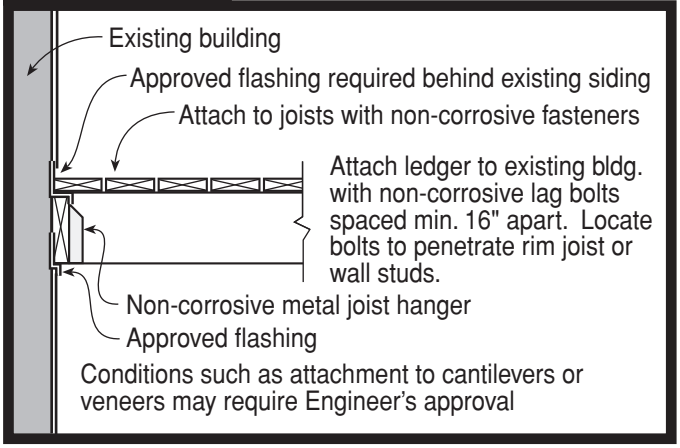

Detail B

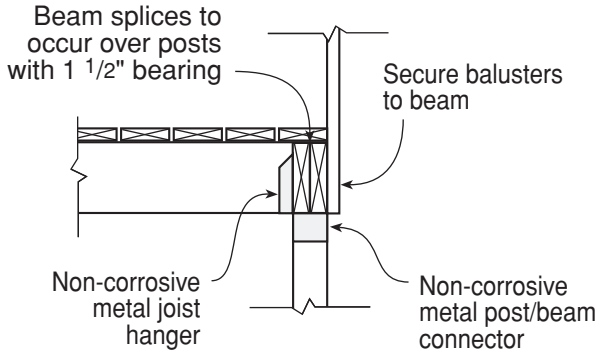

Alternate Detail B1

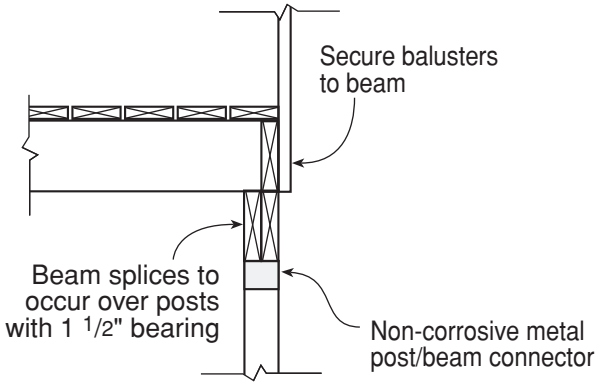

Alternate Detail B2

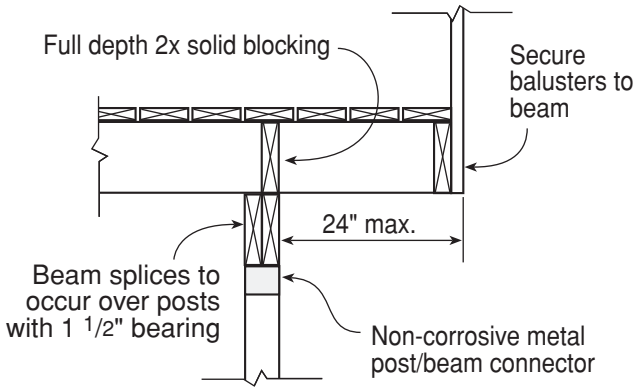

Detail C

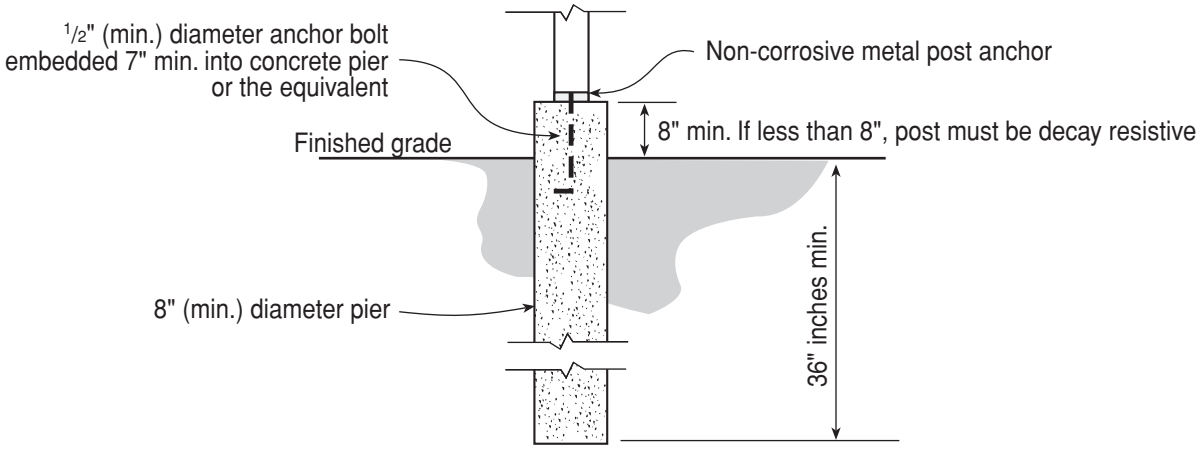

This handout was developed by the Colorado Chapter of the International Code Council as a basic plan submittal under the 2009 International Residential Code. It is not intended to cover all circumstances. Check with your Department of Building Safety for additional requirements.

Arapahoe County Building Division
6924 S Lima St
Centennial CO 80112
(720) 874-6600 office
(303) 794-3201 fax

Single Family Residential Uncovered Decks and Porches

Stair & Handrail Specifications

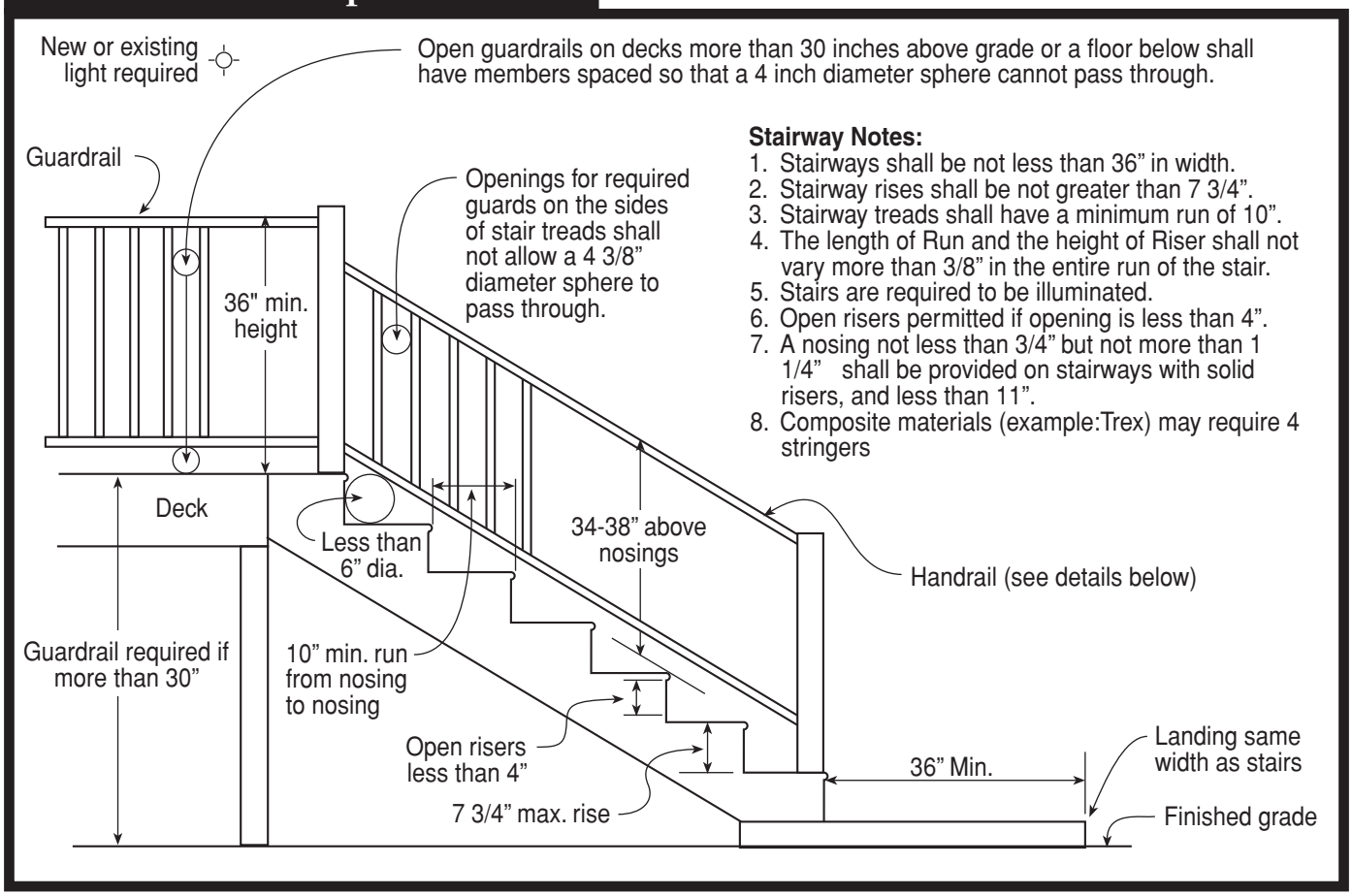

Stairway Notes:

1. Stairways shall be not less than 36" in width.
2. Stairway rises shall be not greater than 7 3/4".
3. Stairway treads shall have a minimum run of 10".
4. The length of Run and the height of Riser shall not vary more than 3/8" in the entire run of the stair.
5. Stairs are required to be illuminated.
6. Open risers permitted if opening is less than 4".
7. A nosing not less than 3/4" but not more than 1 1/4" shall be provided on stairways with solid risers, and less than 11".
8. Composite materials (example:Trex) may require 4 stringers

Handrail Notes:

1. Handrails shall be continuous on at least one side of stairs with 4 or more risers.
2. Top of the handrails shall be placed not less than 34 inches nor more than 38 inches above stair nosings.
3. The handgrip portion of handrails shall be not less than 1-1/4 inches nor more than 2 1/4 inches in cross section for non circular handrails.
4. Handrails shall be placed not less than 1-1/2 inches from any wall or other surface.
5. Handrails to be returned to wall, post or safety terminal (per 311.7.7.2 IRC)

Acceptable Handrail Details

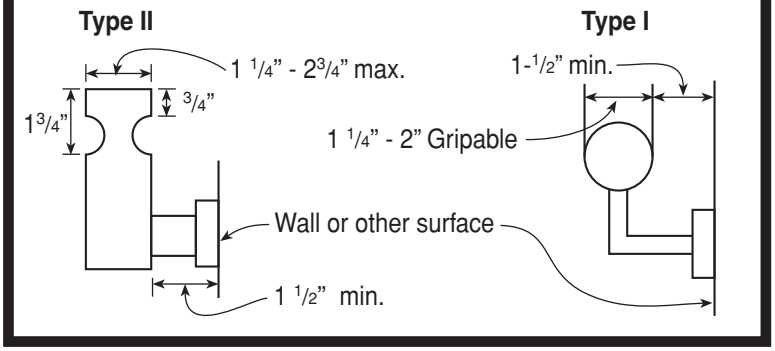

Unacceptable Handrails

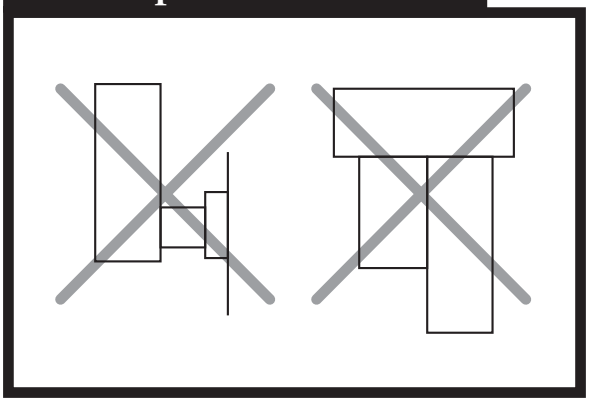

This handout was developed by the Colorado Chapter of the International Code Council as a basic plan submittal under the 2009 International Residential Code. It is not intended to cover all circumstances. Check with your Department of Building Safety for additional requirements.

Arapahoe County Building Division
6924 S Lima St
Centennial CO 80112
(720) 874-6600 office
(303) 794-3201 fax