Building Guide

Colorado Chapter of the International Code Council

Single Family Residential Enclosing Existing Patio Covers

How to Use this Guide

Provide two sets of plans, drawn to scale and complete the following (*hint: use graph paper with ¼" squares. Example: ¼" = 1'*):

1 Complete this Building Guide by filling in the blanks on page two, and indicating which construction details will be used.

2 Provide 2 Plot Plans (**site plan**) showing dimensions of your project or addition and its relationship to existing buildings or structures on the property and the distance to existing property lines drawn to scale.

3 Fill out a building permit application.
The majority of permit applications are processed with little delay. The submitted documents will help determine if the project is in compliance with building safety codes, zoning ordinances and other applicable laws.

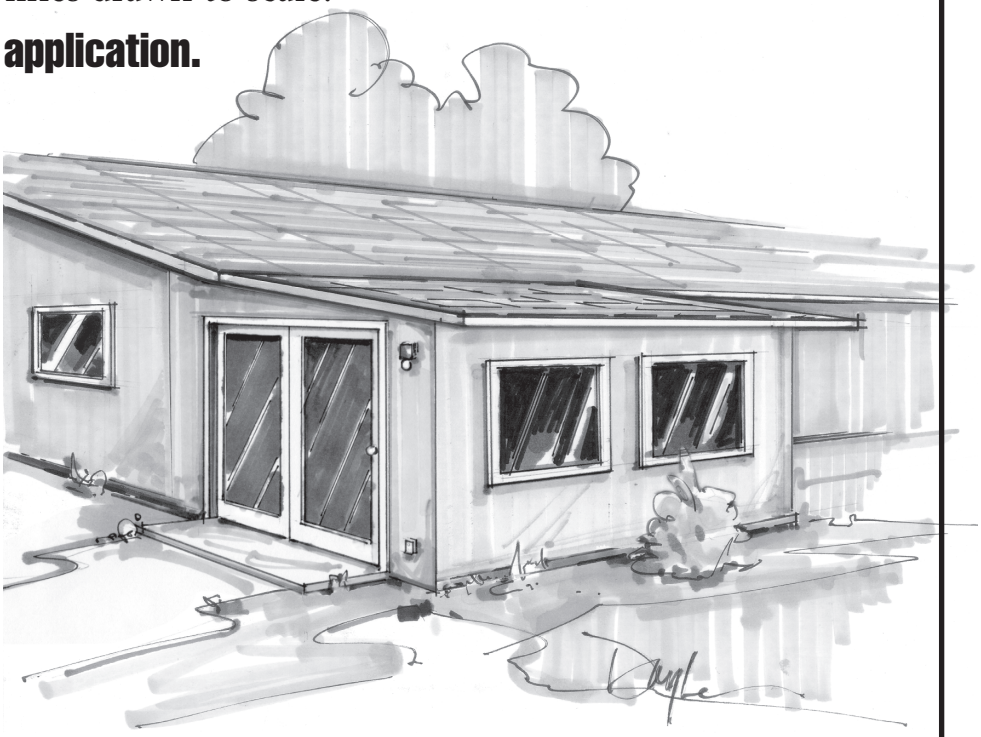

The Colorado Chapter of the International Code Council is a professional organization seeking to promote the public health, safety and welfare to building construction. We appreciate your feedback and suggestions. To obtain a master copy of this building guide, please write to the Colorado Chapter of the International Code Council, P.O. Box 961, Arvada, CO 80001. http://www.coloradochaptericc.org

This handout was developed by the Colorado Chapter of the International Code Council as a basic plan submittal under the 2009 International Residential Code. It is not intended to cover all circumstances. Check with your Department of Building Safety for additional requirements.

Arapahoe County Building Division
6924 S Lima St
Centennial CO 80112
(720) 874-6600 office
(303) 794-3201 fax

Single Family Residential Enclosing Existing Patio Covers

General Notes

1. This submittal would enclose an existing code compliant and previously permitted patio cover with new walls of glass, framing, or other approved materials, to create a new non-heated, non-habitable enclosed patio
2. To be allowed any of the code exceptions listed under Appendix H of the 2009 IRC, Patio Cover enclosure walls may have any configuration, provided the open or glazed area of the longer wall and one additional wall is at least 65% of the area below a minimum of 6 feet 8 inches of each wall, measured from the floor
3. Note that all existing house windows and doors must remain in place. Heated areas and habitable rooms shall be submitted as a residential addition. Check with your local building department for specific design and submittal requirements.
4. The new room shall not block required egress from any area and shall not reduce any required natural light and ventilation.
5. Garage walls, doors, and windows that previously had an exterior exposure but are now within the enclosure shall be modified to meet required fire rated separation requirements.
6. Smoke detectors and carbon monoxide alarms shall be installed throughout the residence in compliance with IRC R314 and R315.
7. Various ICBO-ES / ICC-ES Patio Cover Reports prohibit enclosure.
8. Contact your local Building Department regarding electrical wiring requirements and applicable codes.
9. Provide gutters and downspouts with adequate drainage away from the structure.

Minimum Submittal Documents

- A completed permit application.
- 2 plot plans (site plan) showing the location of the structure to be enclosed, its relationship to existing buildings or structures on the property, and the distance to all property lines.
- 2 sets of complete construction documents, clearly indicating all components and how they are to be anchored to one another, to the slab / foundation, to the roof, and to the dwelling.
- A floor plan view of all room uses within the dwelling that are directly adjacent to the new patio enclosure. Include any existing windows wells (from the basement) that would now be within the enclosure. See sample drawing on page 3
- Details regarding how the new walls / glazing shall be protected from any potential slab movement due to frost and expansive soils.

Submittal Documents that may be Required by Local Jurisdiction

- Engineered stamped construction drawings listing wind and snow loading.
- Engineered stamped foundation plans for the support of all walls / columns
- Frost protected foundation systems, or protection of existing slabs
- A current ICBO-ES / ICC-ES or other approved inspection / design report for proprietary wall component systems or assemblies.
- Provide an electrical plan indicating locations of outlets, lights and switches.
- Stamped engineering for any special construction details, including anchoring the new roof assembly to existing rafter tails, or alternate methods or materials
- Clarification of the type and location of lateral (wind) bracing, wall to foundation bolting, etc

This handout was developed by the Colorado Chapter of the International Code Council as a basic plan submittal under the 2009 International Residential Code. It is not intended to cover all circumstances. Check with your Department of Building Safety for additional requirements.

Arapahoe County Building Division
6924 S Lima St
Centennial CO 80112
(720) 874-6600 office
(303) 794-3201 fax

Single Family Residential Enclosing Existing Patio Covers

Sample Floor Plan

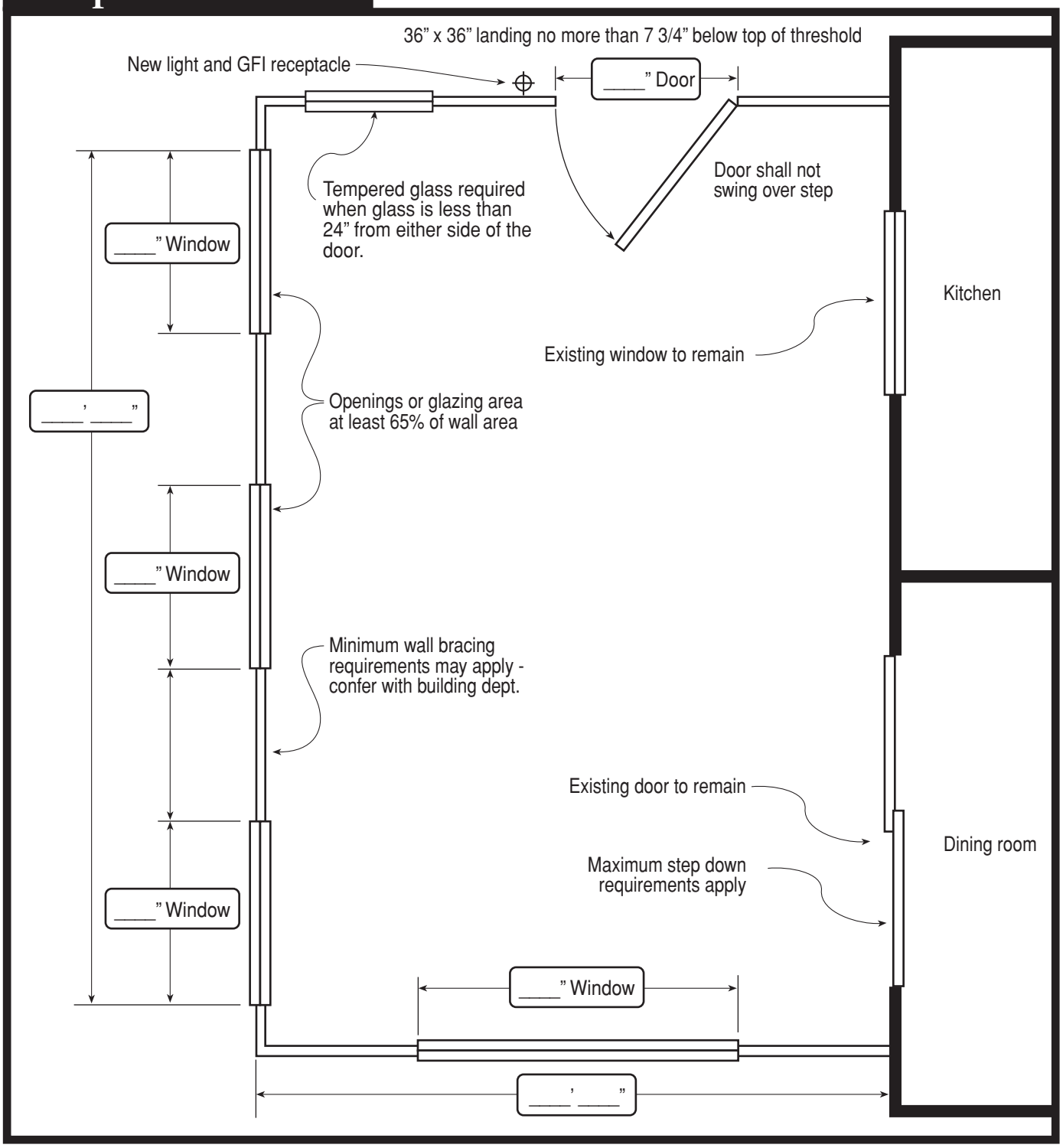

This handout was developed by the Colorado Chapter of the International Code Council as a basic plan submittal under the 2009 International Residential Code. It is not intended to cover all circumstances. Check with your Department of Building Safety for additional requirements.

Arapahoe County Building Division
6924 S Lima St
Centennial CO 80112
(720) 874-6600 office
(303) 794-3201 fax

Single Family Residential Enclosing Existing Patio Covers

Detail A

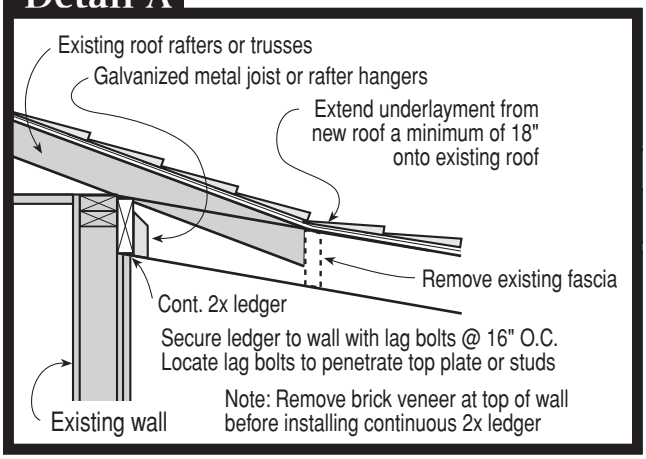

Alternate Detail A

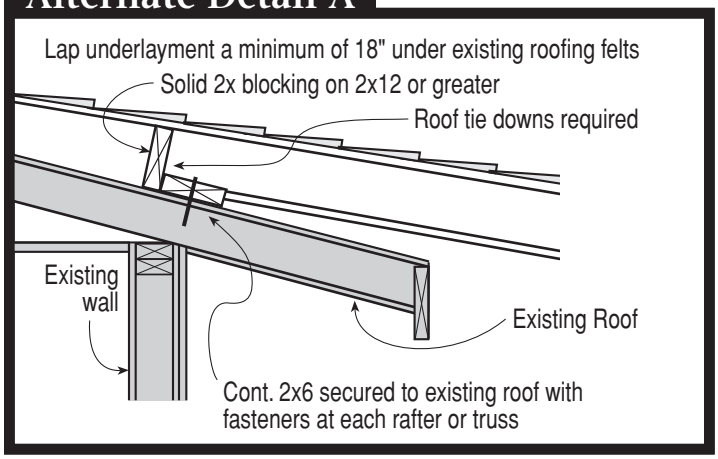

Shed Roof

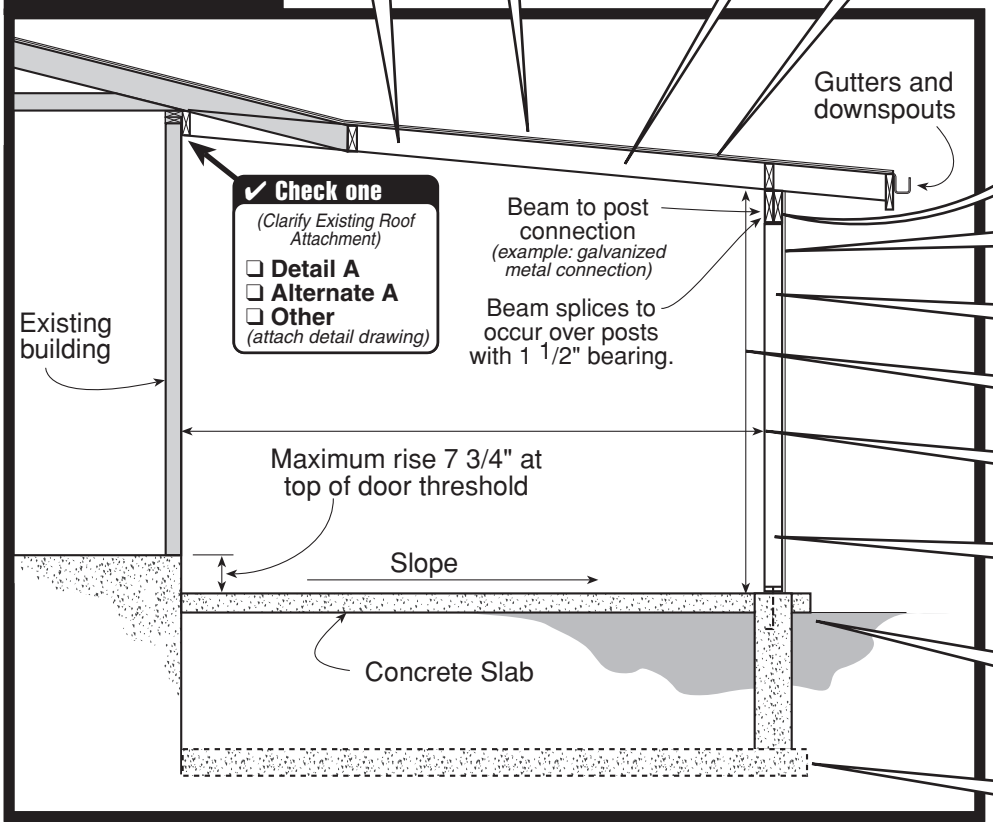

Existing Roof covering _____ *(example: Class A 3 tab shingles)*

12 / pitch ___

2x___rafters spaced___" O.C. *(example: 2 x 8 rafters spaced 24" O.C.)*

Sheathing_____ *(example: 1/2" exterior plywood)*

✔ **Check one**
(Clarify Existing Roof Attachment)
- ❑ **Detail A**
- ❑ **Alternate A**
- ❑ **Other** *(attach detail drawing)*

(__)____"x____"beam *(example: (2) 2"x10")*

Siding _____ *(example: T-111)*

2"x___"studs @___"O.C. *(example: 2"x6" @ 24" O.C.)*

Ceiling Height_____ *(example: 7')*

Span_____

____"x____"posts *(example: 4"x4")* spaced _____ apart *(example: 6')*

Identify Existing Foundation Components
- ❑ Footings/ frost wall
- ❑ Slab with piers only at posts
- ❑ Frost protected foundation
- ❑ _____
- ❑ _____

This handout was developed by the Colorado Chapter of the International Code Council as a basic plan submittal under the 2009 International Residential Code. It is not intended to cover all circumstances. Check with your Department of Building Safety for additional requirements.

Arapahoe County Building Division
6924 S Lima St
Centennial CO 80112
(720) 874-6600 office
(303) 794-3201 fax